Ceiling Diffusers

Type ADLQ

Recommended for room heights from 2.6m to 4.00m

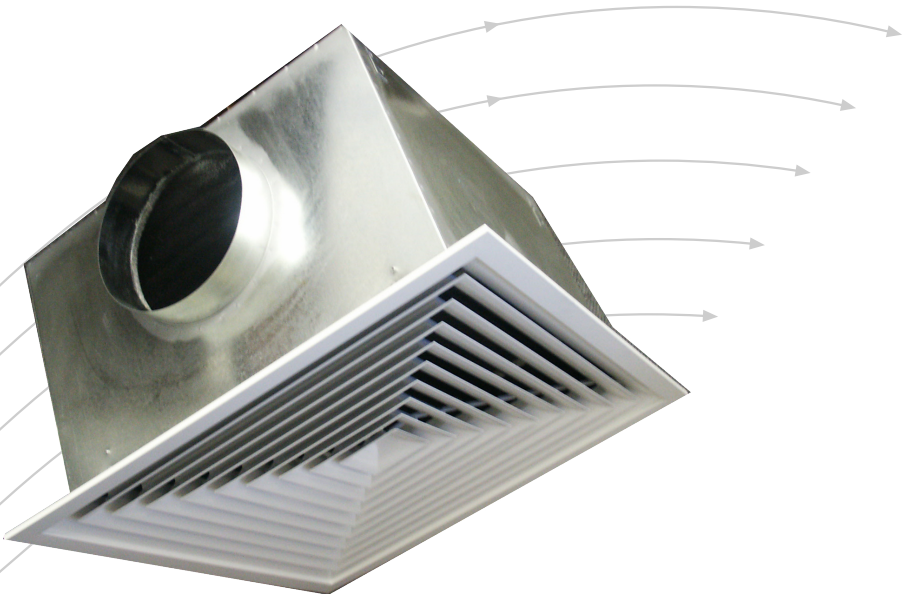

TROX® TECHNIK

TROX (South Africa) (Pty) Ltd.
10 Wigford Road
Masons Mill
Pietermaritzburg

Tel. +27 (0)33 398 1006
Fax. +27 (0)33 398 1100
email : pmb@troxsa.co.za
Website: www.troxsa.co.za

Contents • Description

Description • Discharge Directions 2
Construction • Dimension 3
Installation • Assembly • Materials 4
Selection Data 5
Technical Data 6
Order Details 7

Description

Square ceiling diffusers type ADLQ (aluminium) are ideal for flush mounting in ceilings. They are suitable for use in rooms with heights up to 4.00 m.
The recommended supply air temperature differential is -10K. Ceiling diffusers can be used both for supply and extract applications.
With a fixed blade arrangement the ceiling diffusers are mainly suitable for horizontal discharge. Specially developed ancillaries and plenum boxes, with optional flow rate control dampers, are available to ensure optimum discharge characteristics.

ADLQ-1

ADLQ-2

ADLQ-2E

ADLQ-3

ADLQ-4

Construction
The face section of the type ADLQ diffuser consists of a peripheral border, fixed air control blades and a centre cone. The diffuser face section is fitted or removed by means of a central fixing screw. The screw head is then covered with a decorative cap. Types ADLQ are available as a diffuser face complete with plenum box and side entry spigot, or with the following ancillaries:

SIZE	Q1	Q2	D	K	H
1	244	192	100	140	246
2	300	248	150	196	296
3	356	304	175	252	321
4	412	360	200	308	346
5	468	416	250	364	396
6	495	446	300	394	446
7	595	543	350	492	496
8	623	571	350	519	496

-...-A face section only
-...-AR with rear mounting ring
-...-CK with opposed blade volume control damper adjustable from diffuser face
-...-C with double flap damper adjustable from diffuser face

The use of versatile ancillaries for standard or duct mounting subframes or for installation in vertical ducts, results in great flexibility in installation for this type of diffuser. For easy adjustment of volume flow rate the plenum box is equipped, if required, with a test point for measuring pressure and a volume control damper which can be adjusted by a cord.
The plenum box with side entry spigot can be used with various TROX air diffusers providing the combined technical data is taken into account.

Types ADLQ

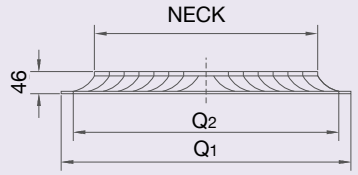

Diagram 1 - ‘A’ face only

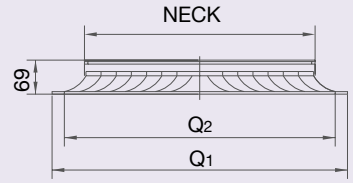

Diagram 2 - ‘AR’ with rear monitoring ring

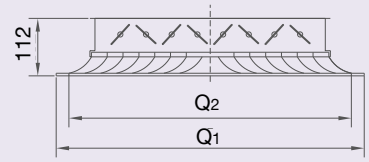

Diagram 3 - ‘CK’ Damper

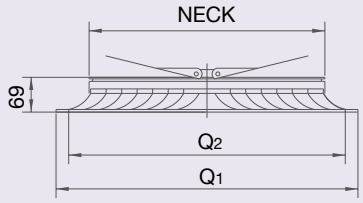

Diagram 4 - “C” Damper

Plenum Box

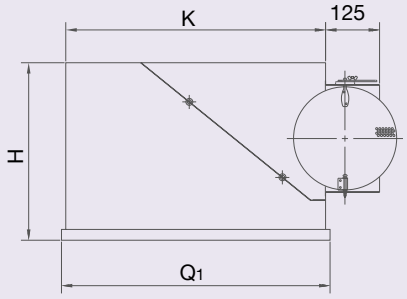

‘DLQ/ADLQ-A’ type plenum

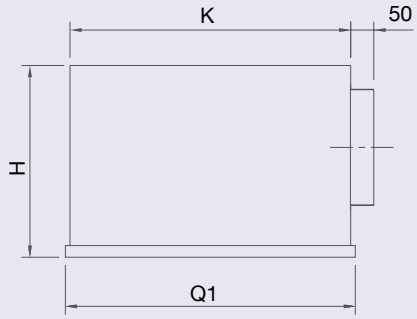

‘DLQ/ADLQ-CK’ type plenum

Installation • Assembly • Materials

Installation • Assembly

Type ADLQ ceiling diffusers can be adapted for use in almost all situations using the accessories available. All sizes are suitable for mounting flush with the ceiling.

The plenum box is suspended on wire or straps using the holes provided. The seal is fixed to the edging of the plenum box. The diffuser face is fixed to the plenum box by the centre screw and the cross bridge provided.

If a vertical rigid duct is provided on site the diffuser can be fixed by means of a cross bridge and centre screw, or directly to the neck of the diffuser, e.g., by self-tapping screws. For these types of fixing the AR can be used. A duct mounting subframe can be supplied for constructions without plenum boxes. The following examples show the various types of installation.

Materials ADLQ

The diffuser face is in extruded aluminium sections. The rear ancillaries are in formed sheet steel. The surfaces are phosphate treated and black stove enamelled .

Plenum box of galvanised sheet steel.

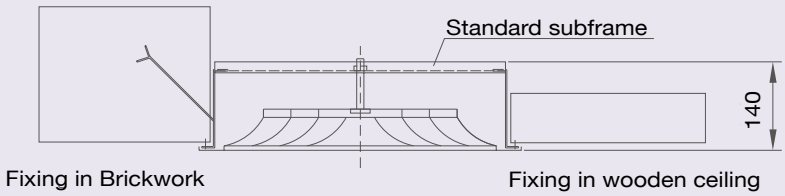

A-type (face fitting) installation bracket

Material:
Sheet steel, black stove enamelled finish.

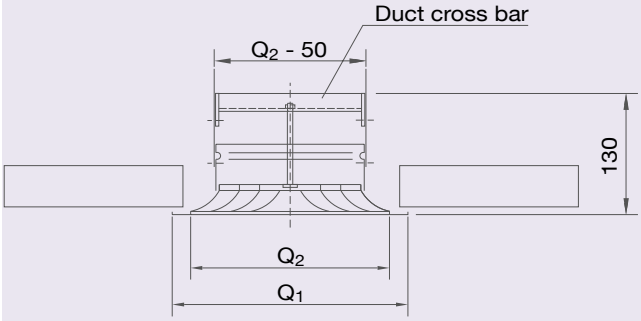

B- type (neck fitting) duct installation bracket

Material:
Sheet steel, black stove enamelled finish

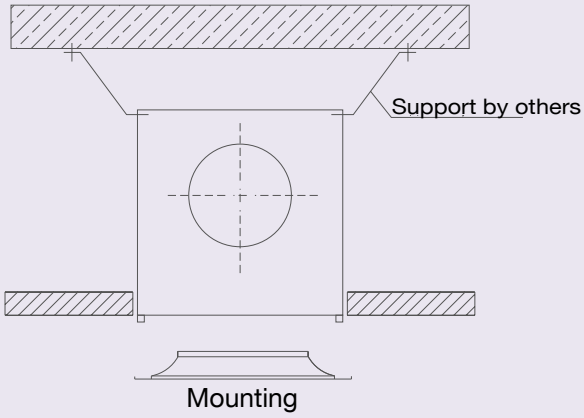

Selection Data

SIZE		1	2	3	4	5	6	7	8
m3/h	□neck (mm)	137	193	249	305	361	388	488	516
150	veff (m/s) Δp (Pa) dB (A) throw(m)	4 10 21 0.9 / 1.5	2.25 3 6 0.5 / 1.1						
200	veff (m/s) Δp (Pa) dB (A) throw(m)	5.3 16 28 1.4 / 2.1	3.1 5 11 0.9 / 1.6	2 2 11 0.8 / 1.3					
250	veff (m/s) Δp (Pa) dB (A) throw(m)	6.6 26 34 1.6 / 2.6	3.8 9 21 1.2 / 2	2.4 3 8 0.9 / 1.5					
300	veff (m/s) Δp (Pa) dB (A) throw(m)	8.1 50 46 1.8 / 3.1	4.5 12 23 1.4 / 2.4	2.8 5 11 1.1 / 1.9	2 2 7 0.9 / 1.5				
350	veff (m/s) Δp (Pa) dB (A) throw(m)		5.2 15 27 1.7 / 2.8	3.3 6 13 1.4 / 2.1	2.2 3 8 1.1 / 1.8				
400	veff (m/s) Δp (Pa) dB (A) throw(m)		6.1 21 32 1.9 / 3.1	3.7 8 18 1.5 / 2.5	2.5 3 10 1.3 / 2	1.8 1 7 1 / 1.7			
450	veff (m/s) Δp (Pa) dB (A) throw(m)		6.8 27 35 2 / 3.	4.2 10 22 1.7 / 2.7	2.8 5 12 1.4 / 2.2	2 2 8 1.1 / 1.9			
500	veff (m/s) Δp (Pa) dB (A) throw(m)		7.5 35 39 2.4 / 3.9	4.6 14 25 1.8 / 3	3.2 6 14 1.5 / 2.5	2.2 3 9 1.4 / 2.1	1.9 1 8 1.2 / 2		
600	veff (m/s) Δp (Pa) dB (A) throw(m)		9 50 45 2.8 / 4.5	5.6 19 32 2.3 / 3.7	3.9 9 23 1.8 / 3	2.7 5 12 1.5 / 2.5	2.4 2 10 1.4 / 2.4		
700	veff (m/s) Δp (Pa) dB (A) throw(m)			6.8 26 37 2.5 / 4.3	4.5 12 25 2 / 3.5	3.1 5 15 1.7 / 3	2.7 5 12 1.6 / 2.6	1.7 1 10 1.4 / 2.1	
800	veff (m/s) Δp (Pa) dB (A) throw(m)			7.8 36 41 2.9 / 5	5.1 15 29 2.4 / 4	3.6 8 20 2 / 3.4	3.1 5 15 1.8 / 3	1.9 1 12 1.5 / 2.5	
900	veff (m/s) Δp (Pa) dB (A) throw(m)			8.4 42 43 3.3 / 5.5	5.7 19 32 2.7 / 4.5	4 10 24 2.3 / 3.8	3.5 6.5 19 2.1 / 3.5	2.22 3/2 13 1.7 / 2.8	2 2 13 1.6 / 2.6
1000	veff (m/s) Δp (Pa) dB (A) throw(m)			9.5 57 48 3.6 / 6	6.3 22 35 3 / 5	4.4 12 26 2.5 / 4.2	3.8 9 23 2.3 / 3.9	2.36 3 14 1.8 / 3	2.17 3 14 1.7 / 2.9

Technical Data

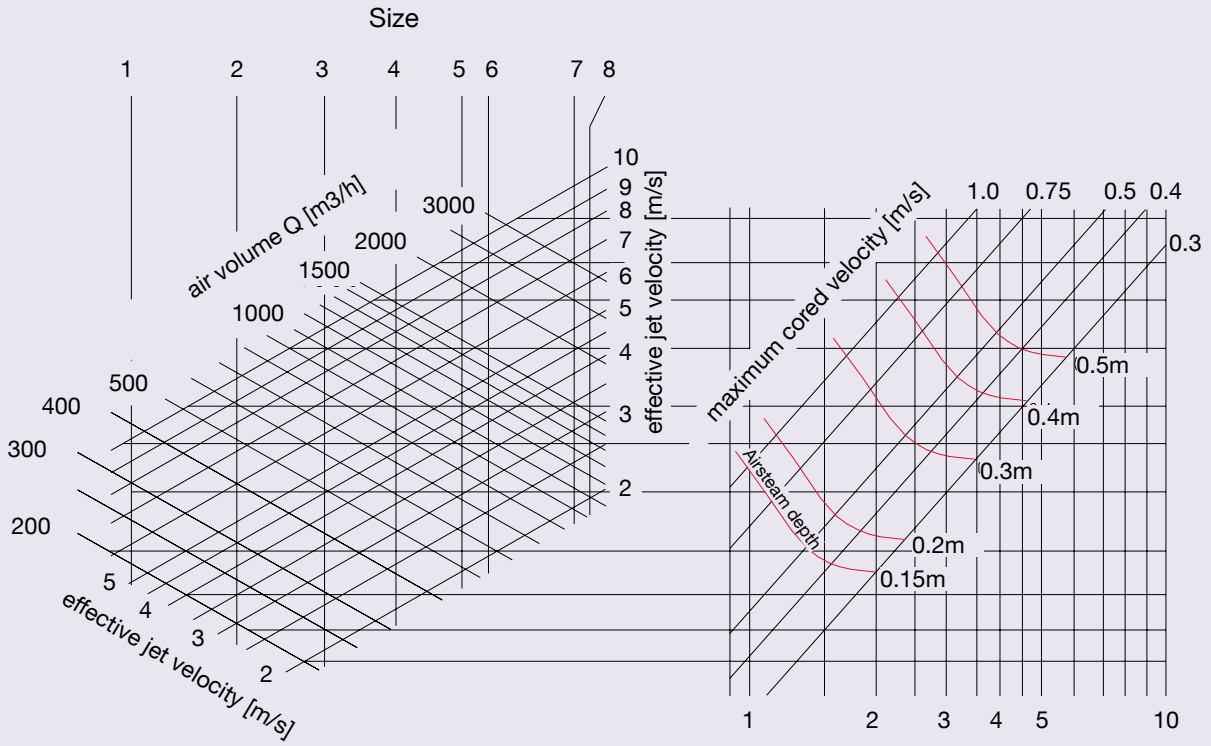

ADLQ 4 way

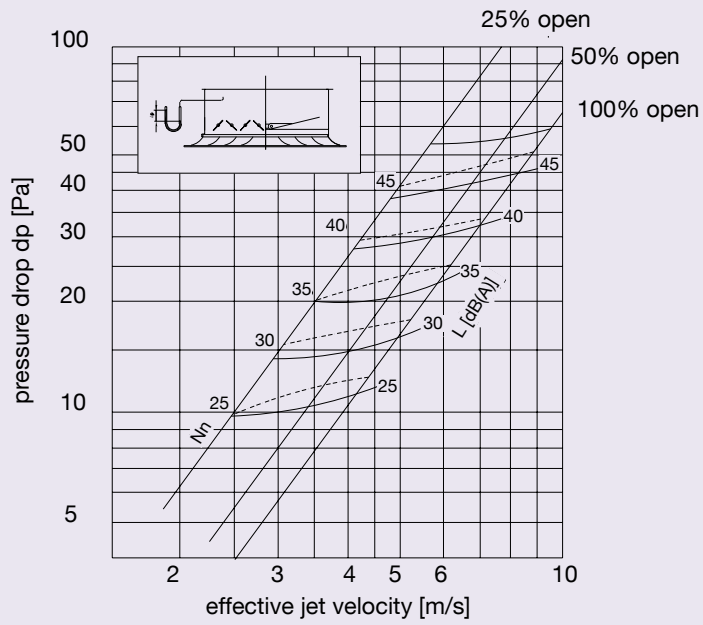

ADLQ-CK and C

Order Details

Specification Text
Square ceiling diffuser for flush mounting, suitable for horizontal discharge, comprising diffuser face with mitred perimeter border, border has rear sealing strip, fixed air control blades, central fixing screw with decorative cap. Optional ancillaries: rear mounting ring, opposed blade damper adjustable from the front face, double flap damper adjustable from the front face; (alternatively with spigot damper). The plenum box also has hanging cleats for suspending the assembly from the ceiling slab.

Materials ADLQ
The diffuser face is in extruded aluminium sections, powder coated textured white VEP1595 rear ancillaries in formed sheet steel, surfaces phosphate treated and stove-enamelled black.

Order Code

ADLQ -CK -V - L - M - 0 / wxhxØ / OF / 4 / 0 / * / F

Type

A - Face only
CK - OBD

0 - No plenum
V - Top Entry
H - Side Entry
U - Unlined
L - Linded

0 - No spigot damper

M - With spigot damper

0 - Without installation subframe
A - Standard subframe
B - Duct cross bar
*C - Ceiling Adapter Plate
595 x 595
495 x 495
* - to be specified on order

Standard Sizes
1 to 10

Odd Sizes eg:
595 x 595 OF
450 x 450 N
300 x 300 N

OF - Overflange
N - Neck

Blow Pattern:
1
2
2E
3
4

0 - Standard White RAL9016
0 - Standard White RAL9010
0 - Painted to NA Colour
P1 - Powder Coated to RAL...

State Colour

Fixed Core Only

Order Example

Make: TROX
Type: ADLQ - CK - V - U - 0 / 595 X 595 x 250Ø / OF / 4 / 0 / RAL9016 / F

Design changes reserved • All rights reserved © TROX (South Africa) (Pty) Ltd October 2005